MODULE :- 02 :-

> orthographic projections → points.

> projections of straight lines. .....

> " " planes. ▭ ▱ △

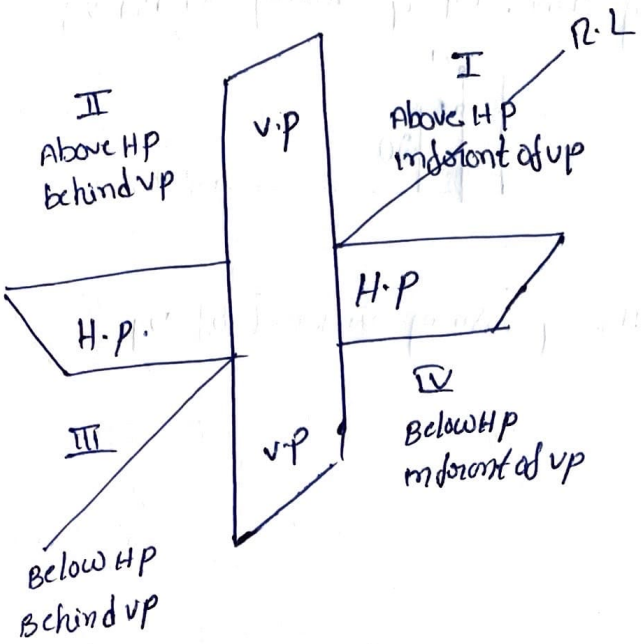

Q.

Above H.P ↑
Below H.P ↓ → R.line.

Behind vp ↑
infront of vp ↓ → R.line.

→ All HP values are Front views — a', b', c', d'....

→ All vp values are Top views — a, b, c, d...

→ ON HP / IN HP & ONVP / INVP points on Reference line.

1) A point "S" is 25mm above H.P & 20mm infront of VP

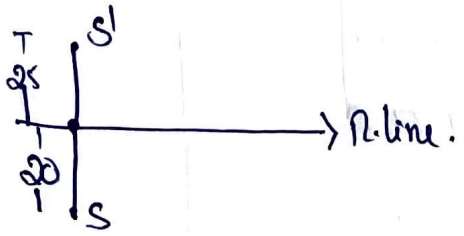

2. A point "S" is 25mm above H.P & 20mm behind V.P

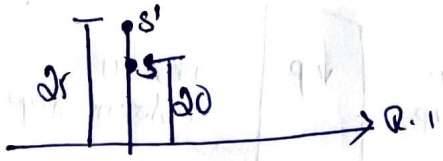

3. A point 'S' is in H.P & 35mm infront of V.P

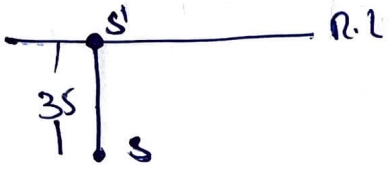

4. A point "S" is in H.P & in V.P

5) Draw the projection of the following points on same ground line.

i) A 20mm above H.P ; 15mm infront of VP

ii) B 25mm above H.P ; 25mm behind V.P

iii) C in H.P ; 30mm infront of V.P.

i)

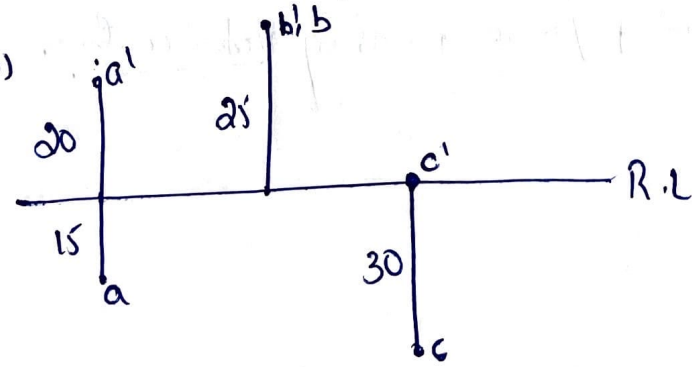

(6) Same Questions, keeping their projectors 35mm apart.

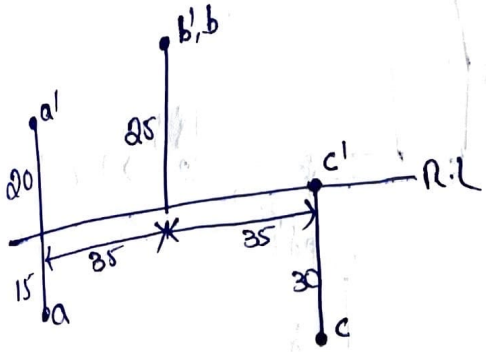

7. A point P is 30mm above H.P, 20mm infront of VP & 25mm from P.P (or) A.P – profile plane (or) auxilary plain.

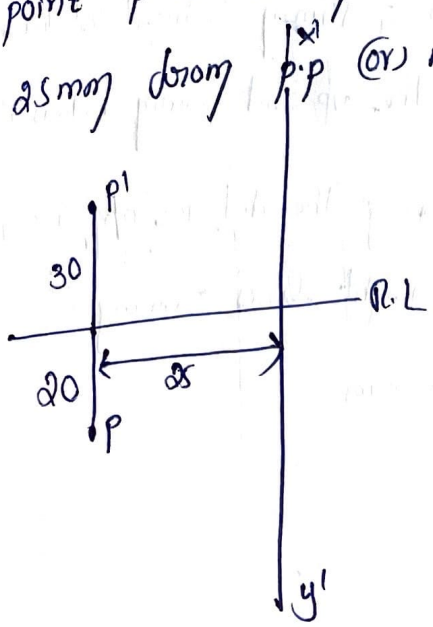

(8) Draw, the projections of the following points on the same ground line, keeping the projectors 25mm apart.

a) 40mm above the HP & 20mm behind the VP.
b) 40mm above " HP & 25mm infront of the VP
c) in the VP & 40mm above the H.P
d) 25mm below the HP & 25mm behind the VP
e) 15mm above the HP & 50mm behind the VP
f) 40mm below the HP & 25mm infront of the VP
g) in both the HP & the V.P.

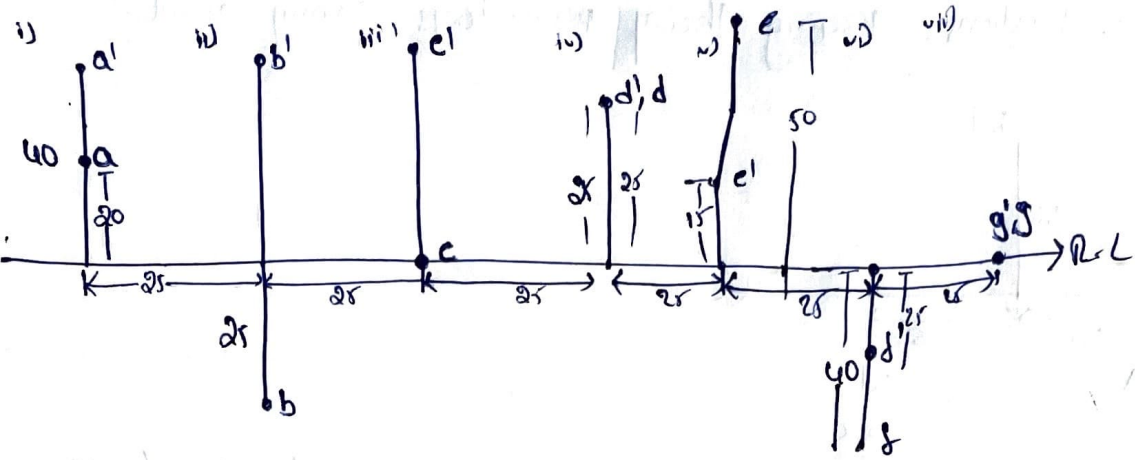

(9) A point "p" is 35mm above the HP & 50mm infront of the VP. another point Q is 25mm behind the VP and 40mm below the HP. Draw the projections of p and Q keeping the distance b/w their projections Equal to 90mm. Draw straight lines joining i) their Top views & ii) their front views

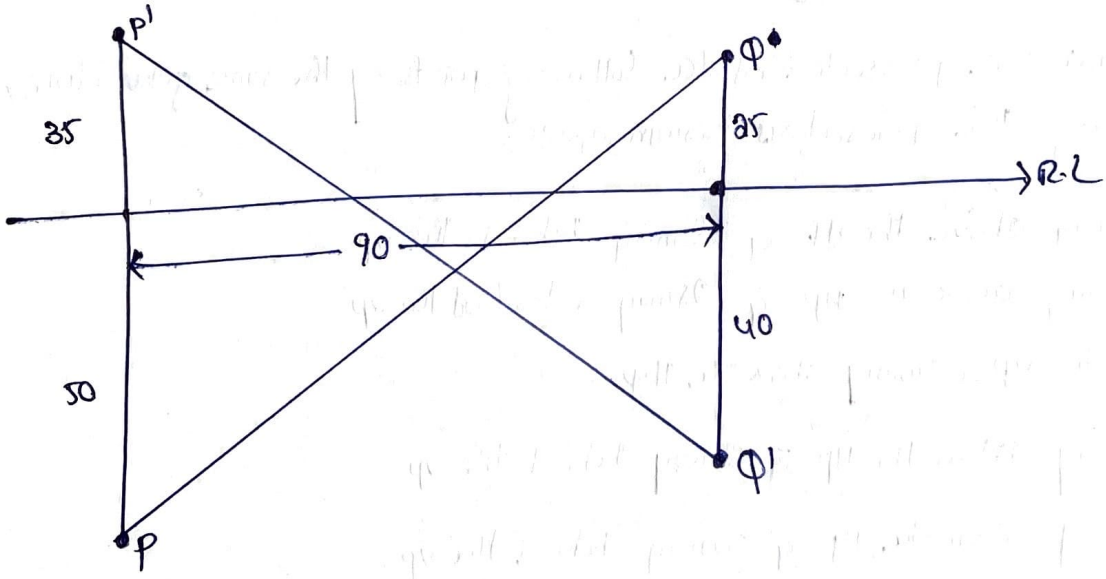
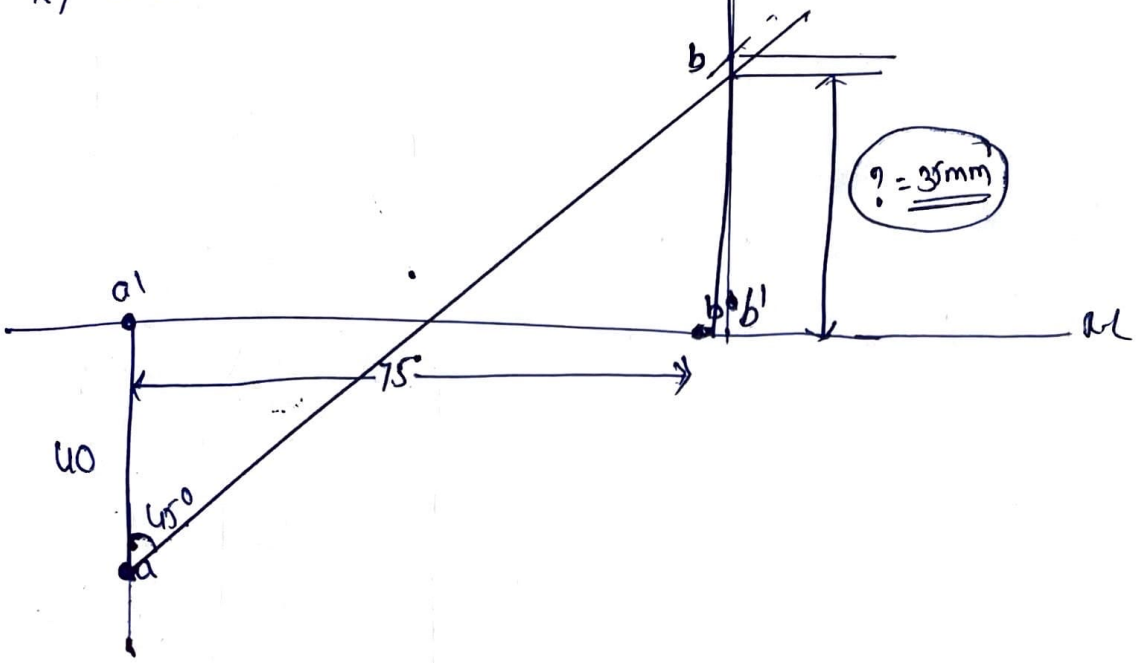
Q. Two points A & B are on HP, the point A is 40mm infront of VP while point B is behind VP. The distance b/n two projectors A&B is 75mm joining with the straight line their top views make an angle 45° with xy reference line. determine the distance of the point B from VP.